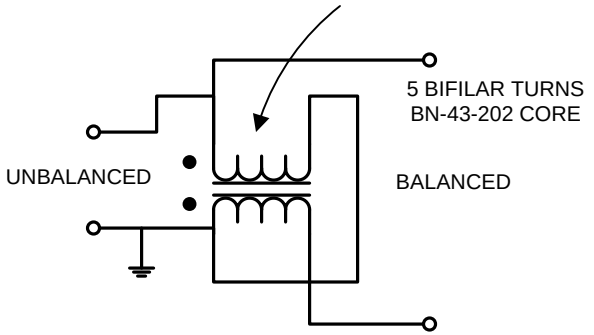

1:4 VOLTAGE BALUN

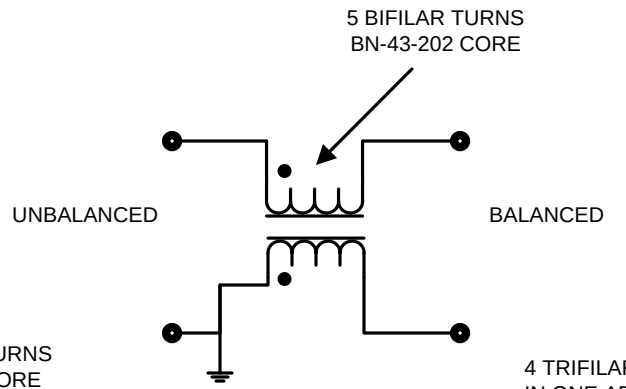

1:1 CURRENT BALUN

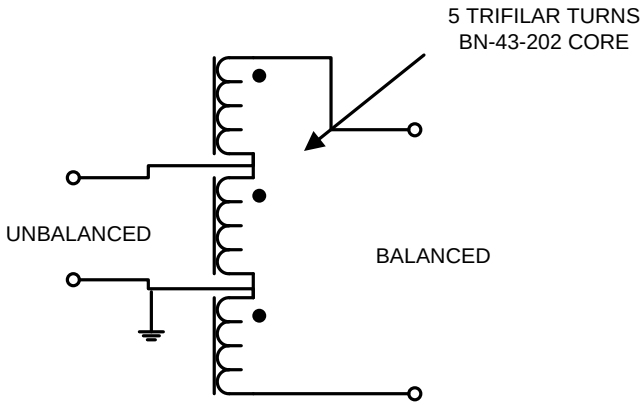

1:9 VOLTAGE BALUN

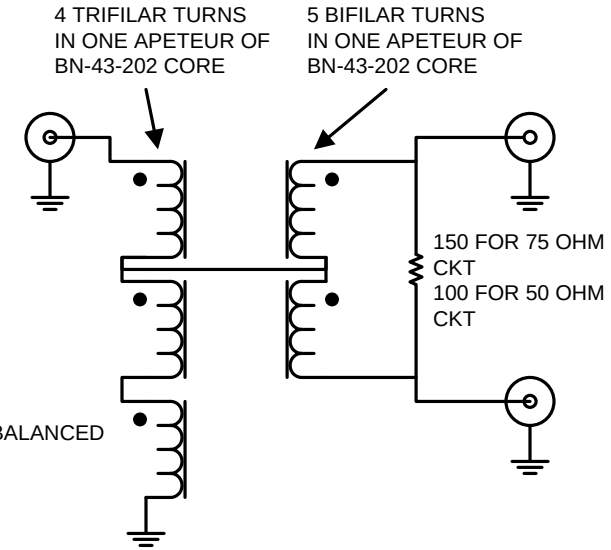

3dB HYBRID SPLITTER

30dB ISOLATION BETWEEN OUTPUTS

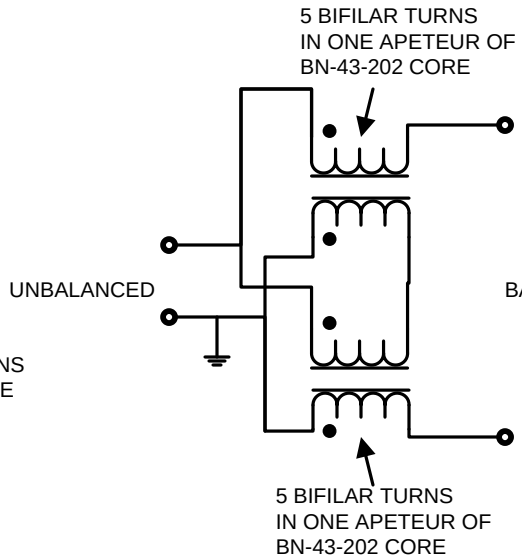

450/675 OHMS

1:4 CURRENT BALUN

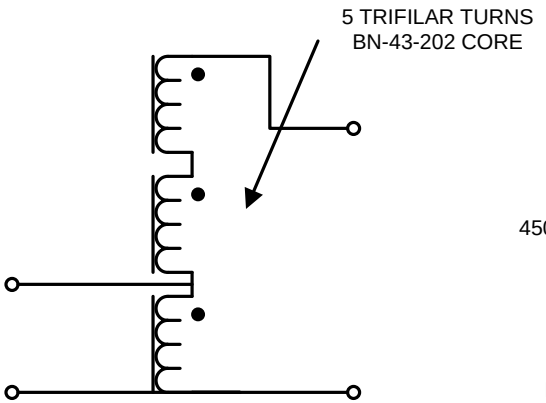

1:9 "UN-UN" TRANSFORMER

FREQUENCY RANGE OF ALL TRANSFORMERS
APPROXIMATELY 100khZ TO 30MHZ

N3FRQ Broad-Band Transformers

Al Klase - 13 Jun 05