W9FKC
The Suitcase Portable

Al Klase – N3FRQ

Rev. 2.0 – 1 Oct 2020

This radio recently turned up in the estate of Joe Cro – N3IBX

The case is from a GE Model 254 portable. This was obtained as surplus for $1.75.

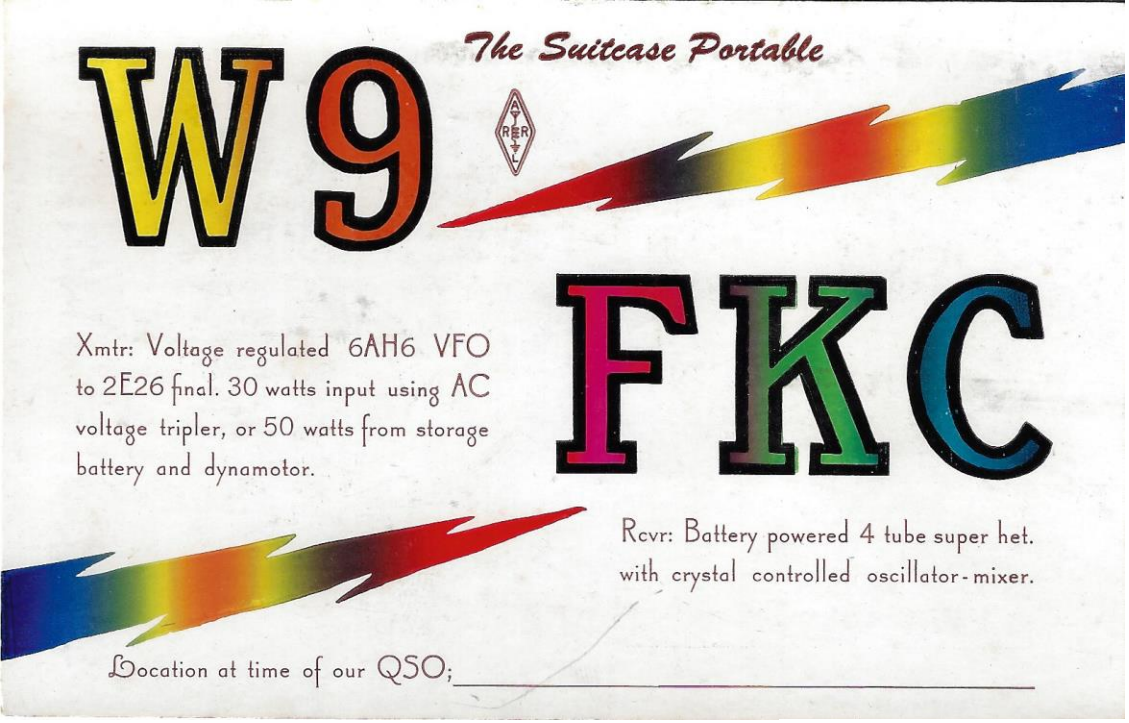

Myron Hexter
P. O. Box 73
RAVINIA, ILLINOIS
U. S. A.

Radio _____ **Confirming**
QSO of _____ **19**____,
at _____:_____ _.**m. CST.**
Ur 7 Mc. sigs R____**S**____**T**____

AMATEUR-RADIO FOR INTERNATIONAL FRENDSHIP

_____**QSL.**

C. Fritz · Joliet, Ill.

The transmitter and receiver described on the other side are built in to a small suitcase measuring 15" long, 10" high, and 6" thick. The back has a compartment to carry phones, "bug", log, pencil, and reel of antenna wire. The AC voltage tripler is in the same case and gives 385 volts DC with a load to the final of 78 mills. This **complete station** weighs only 19 pounds. When desired, the power and control leads can be plugged into a PE-103 dynamotor running on a storage battery. Input is then 500 volts at 100 mills. Built in Pi-network antenna tuner loads end-fed random length wires, or any type 40 meter doublet. 9 foot center-loaded whip antenna is used when operating from automobile. Receiver line-up: **1R5** crystal controlled oscillator and mixer using 6800 kc. crystal to beat with incoming signal to form IF frequency; **1T4** tunable IF amplifier and regenerative detector; **1S5** first audio; **3S4** second audio.


3S4
1S5
1T4
1R5
6146
6AH6
SPARE XTAL
FOR RECEIVER
OB2 OB2
NEWARK
ELECTRIC
CO.
GLORY
ELECTROLYTIC
350 VDC


SPARE XTAL
FOR RECEIVER
MINILOG
AMATEUR RADIO STATION W9EKC
ENGAGED IN PORTABLE & MOBILE OPERATION
LICENSEE Myron Hextek
HOME ADDRESS Box 73 Revinia, Ill.
BOOK NO. 5
FROM
TO
30¢
AMERICAN RADIO RELAY LEAGUE
WEST HARTFORD 7 - - CONNECTICUT

It had been the subject of a December 1951 QST construction article.

A Complete Portable 40-Meter C.W. Station

25 Watts of Convenience for Field or Mobile Operating

BY MYRON HEXTER,* W9FKC

• In this article, you will find the description of a portable 40-meter c.w. station, complete in every detail, including a 25-watt transmitter, a superhet receiver, and power supplies in one 19-pound package. Whether you are a traveling man making hotel stops, or a weekend country-jaunter, this suitcase job that will operate from either a.c. or a mobile supply will be something you'll want to read about.

and out of oscillation so smoothly that it is hardly audible and it isn't necessary to set the regeneration control critically. Two stages of audio provide more than enough headphone volume, even for noisy locations. Most of the time the gain controls are run about halfway open. The transmitter has been found equally effective in over 10,000 miles of portable and mobile work without a defect of any kind showing up.

Circuits

The circuit of the transmitter is shown in Fig. 1A. A high-*C* Colpitts circuit is used in the VFO.

Inside

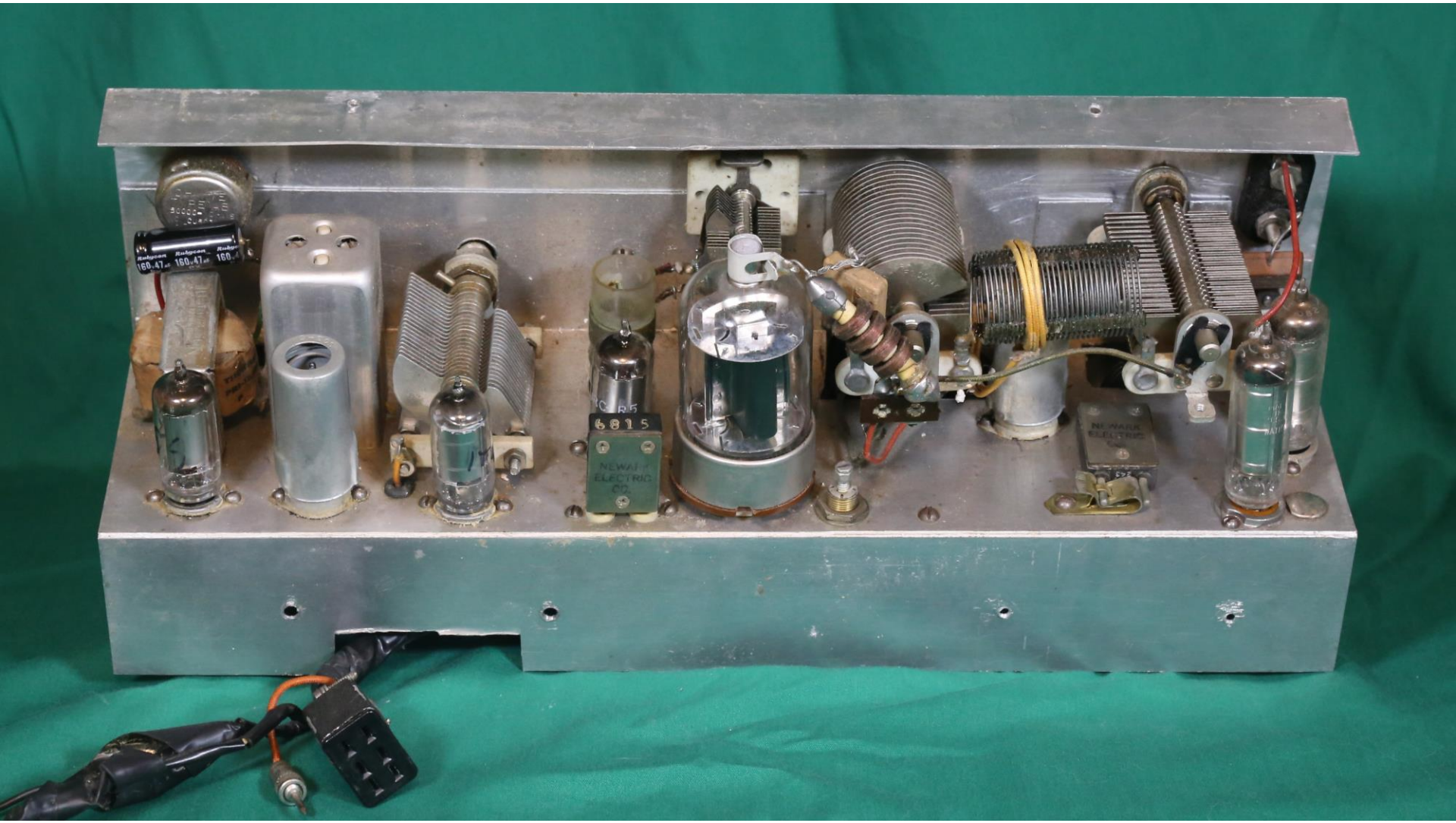

Underneath

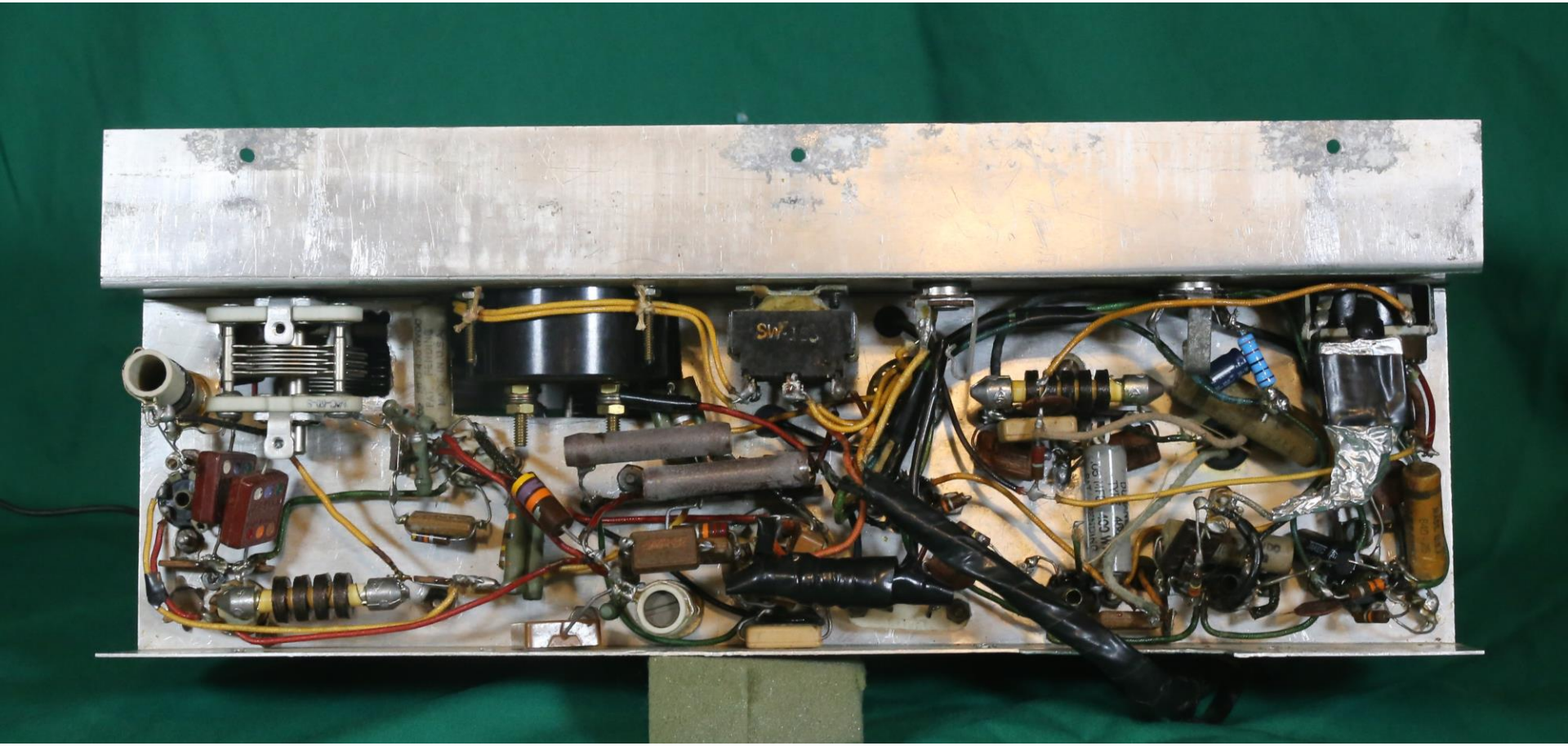

I did some minor restoration to get the receiver going.

Signature

So, Who was this guy?

Carried right inside the lid.

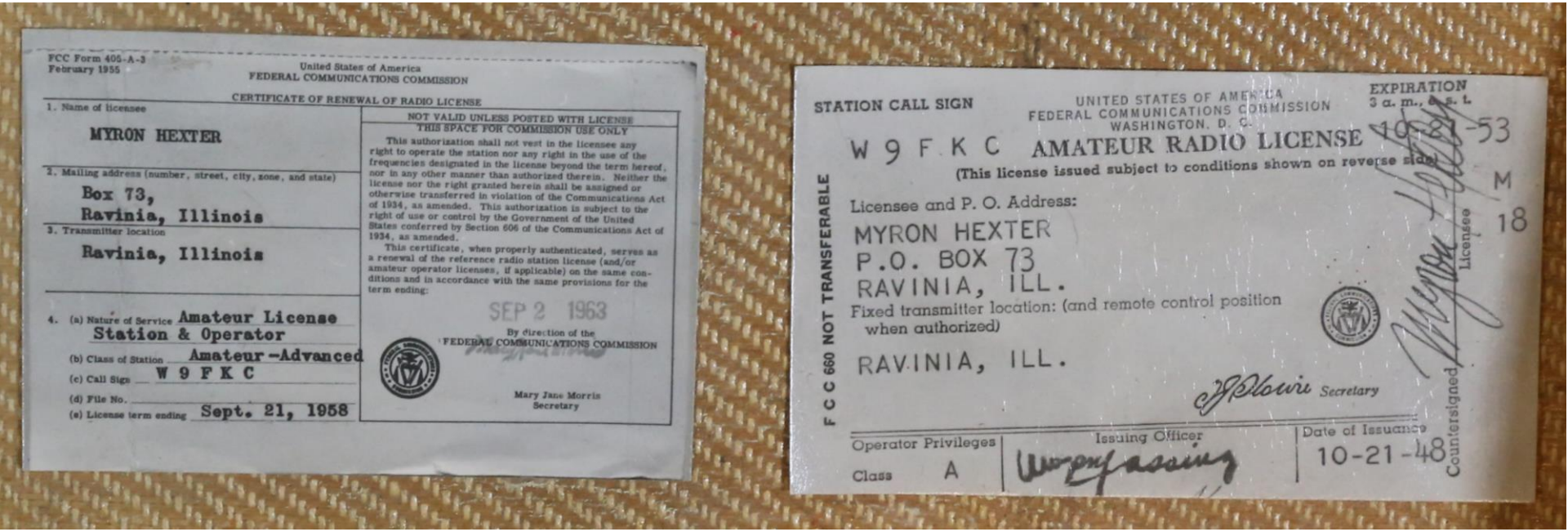

FCC Form 405-A-3
February 1955

United States of America
FEDERAL COMMUNICATIONS COMMISSION

CERTIFICATE OF RENEWAL OF RADIO LICENSE

1. Name of licensee
MYRON HEXTER

2. Mailing address (number, street, city, zone, and state)
Box 73,
Ravinia, Illinois

3. Transmitter location
Ravinia, Illinois

4. (a) Nature of Service Amateur License Station & Operator
(b) Class of Station Amateur-Advanced
(c) Call Sign W 9 F K C
(d) File No.
(e) License term ending Sept. 21, 1958

NOT VALID UNLESS POSTED WITH LICENSE
THIS SPACE FOR COMMISSION USE ONLY

This authorization shall not vest in the licensee any right to operate the station nor any right in the use of the frequencies designated in the license beyond the term hereof, nor in any other manner than authorized therein. Neither the license nor the right granted herein shall be assigned or otherwise transferred in violation of the Communications Act of 1934, as amended. This authorization is subject to the right of use or control by the Government of the United States conferred by Section 606 of the Communications Act of 1934, as amended.

This certificate, when properly authenticated, serves as a renewal of the reference radio station license (and/or amateur operator licenses, if applicable) on the same conditions and in accordance with the same provisions for the term ending:

SEP 2 1963

By direction of the
FEDERAL COMMUNICATIONS COMMISSION

Mary Jane Morris
Secretary

STATION CALL SIGN

UNITED STATES OF AMERICA
FEDERAL COMMUNICATIONS COMMISSION
WASHINGTON, D. C.

EXPIRATION
3 a. m., e. s. t.
10-21-53

W 9 F K C AMATEUR RADIO LICENSE

(This license issued subject to conditions shown on reverse side)

Licensee and P. O. Address:
MYRON HEXTER
P.O. BOX 73
RAVINIA, ILL.

Fixed transmitter location: (and remote control position when authorized)
RAVINIA, ILL.

J P Lowie Secretary

F C C 660 NOT TRANSFERABLE

Operator Privileges
Class A

Issuing Officer

Date of Issuance
10-21-48

Countersigned

Licensee
M
18

QST magazine, Febuary, 1994, p83

Seven decades an ARRL Member

On December 10, 1923, Hiram Percy Maxim, 1AW, and K. B. Warner, 1BHW, signed an ARRL membership certificate for 15-year-old Myron "Mike" Hexter, 6CNL, of Los Angeles. In early December, ARRL Headquarters issued a 70-year endorsement for Mike's 50-year membership plaque. He poses below in his Highland Park, Illinois, ham shack. Young Mike became 6CNL in April 1923, and then W9FKC when he moved to the Chicago area in 1926. Mike is up in the stratosphere on Mixed DXCC, with 376 countries confirmed. He and his wife, Lucille, celebrated their 57th wedding anniversary in January. As usual, he plans to attend the W9DXCC Convention this September (where he'll probably be the last one standing in the "DXCC Countdown").

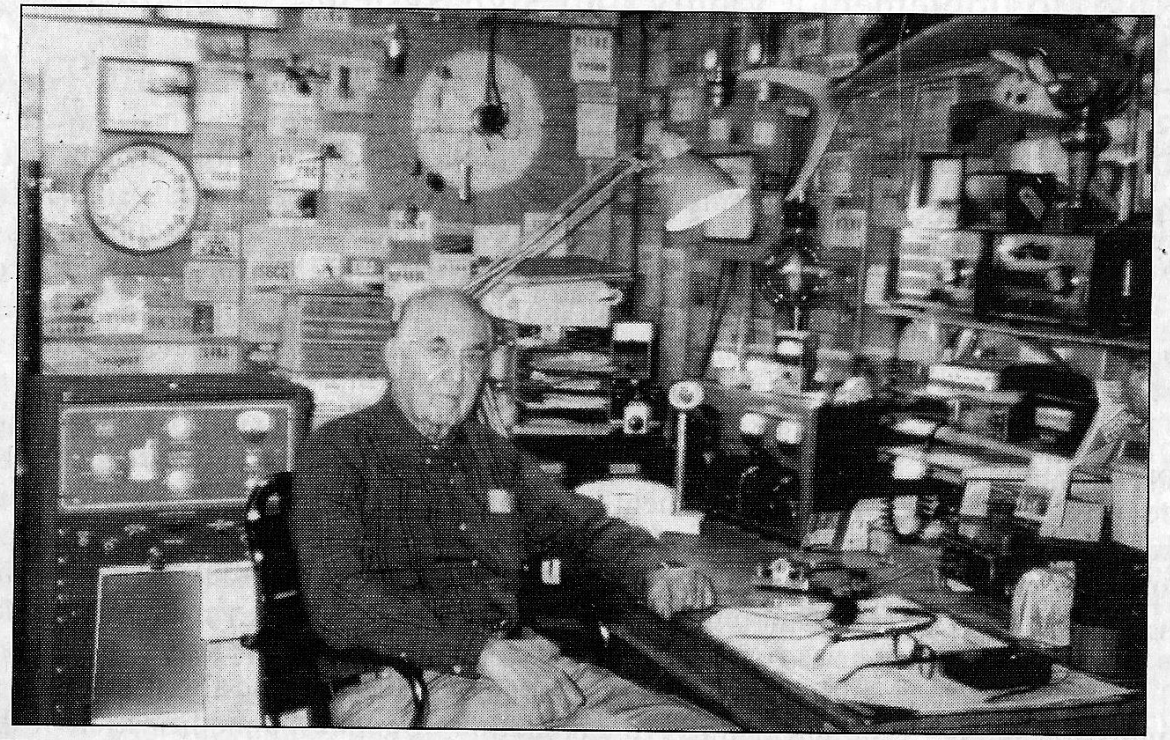

Mike’s Obituary
Chicago Tribune – 7 Aug 1999

Myron Hexter, 91, a ham radio operator who became known throughout the country as "Mike at the mike," died of cancer Wednesday in his Highland Park home. Mr. Hexter spent much of his childhood in Lacon, Ill. By age 15, he had received his amateur radio license. "Although he was known as `Mike at the mike,' he was most adept in the use of Morse code," said his daughter, Nancy Merrill. Mr. Hexter invented the Siamese paddle, an electronic keyer for sending Morse code that is widely used in the world of ham radio. He belonged to many radio organizations, such as the England-based First Class CW Operators Club. He not only conversed with fellow ham radio operators all over the world, but he also assisted in many crises, relaying messages via ham radio to families during several earthquakes. In the early 1990s, he traveled to Yugoslavia, where local operators honored him with the "Ham of the Year" award. Mr. Hexter earned a pilot's license and delivered the first airmail from his hometown of Lacon to Chicago in May 1938 during Air Mail Week. But for all of his accomplishments, including his 40-year career at the Crescent Bronze Powder Co., he was most proud of his family. "He never missed an event--graduation, plays, athletic events, he went to everything he could," his daughter said. In addition to his daughter, Mr. Hexter is survived by his wife of 62 years, Lucille; two other daughters, Judith Riskind and Mary; eight grandchildren; and two great-grandchildren. Services will be private.

Hints and Kinks For the Experimenter

QST Magazine, September 1953

“LIGHTWEIGHT "GUY WIRES"

“MONOFILAMENT” fishing line leader, made of Du Pont nylon, sold in 100-yard rolls for Approximately $4.80, makes lightweight guy lines that are easily handled, nearly invisible and free of properties that affect antenna radiation patterns. The type having a diameter of 0.032 inch and a test strength of 40 pounds is being used here at W9FKC to guy a 83-foot vatical and has been through winds up to 60 m.p.h. during the last four months. - *Myron Hexter, W9FKC*

40-pound line carried in Mike’s portable station.

QST magazine, July 1952

The Siamese Paddle

A Key To Key the Keyer

BY MYRON HEXTER,* W9FKC

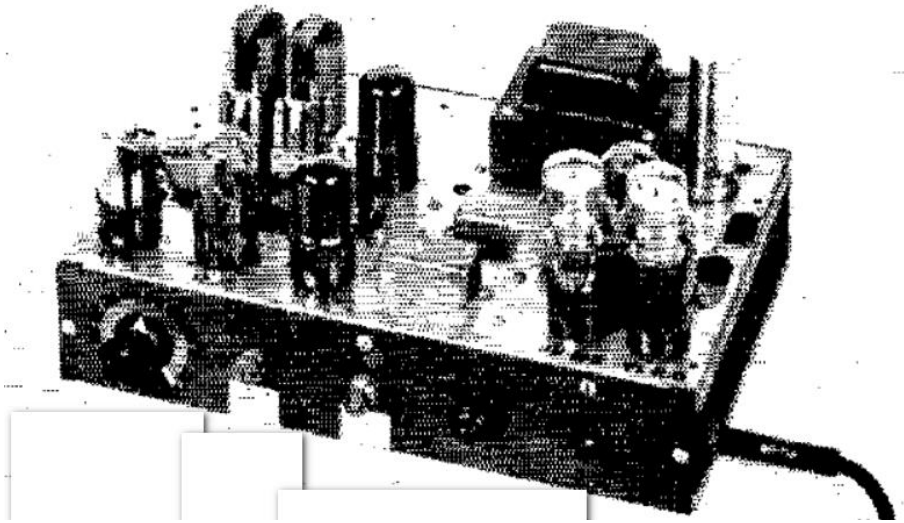

There was growing interest in electronic keyers, and people were starting to cut up Vibroplex bugs to get the appropriate contacts.

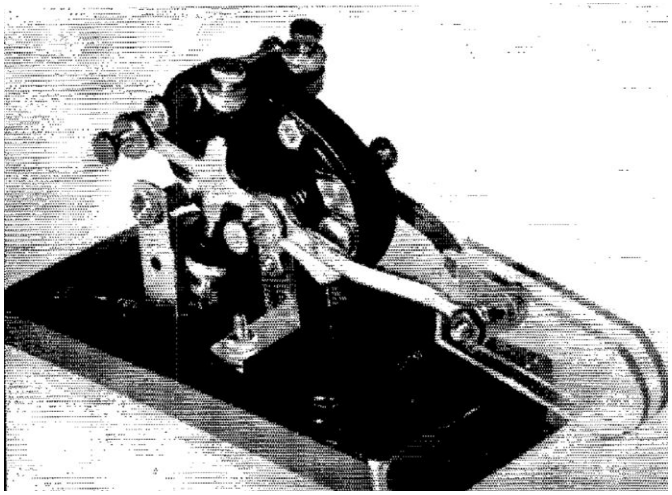

Mike's solution: t wo war-surplus J-38 keys, back to back, to provide dot and dash inputs to the keyer.


MYRON HEXTER W9FKC
BOX 73
RAVINA, ILLINOIS
ANT.
ANTENNA
FINAL AMPLIFIER
PEAK
RECEIVER TUNING
REGENERATION
VFO
FINAL AMPLIFIER PLATE CURRENT
AUDIO GAIN
OFF ON
TRANSMIT
KEY
W9 FKC

Mike on Portable Operation

From the December 1951 QST article

Antennas

“A spool of 300 feet of stranded wire is provided for the antenna. Any length over 25 feet will work, although more should be used, if possible. It is not necessary to cut the wire off the spool. Just bend the wire back on itself, attach it to the antenna terminal and lay the spool on top of the ease.

If suitable trees are available, it is easy enough to tie a string to a rock and toss it over a branch, using the string to pull the antenna wire up to within a foot or two of the branch.

In a hotel, the wire can be fed out a window to within a story or two of the ground, or the wire can be strung around two or three sides of a room. At a motel or cabin, don't be afraid that an inside wire won't work, even though it is only 7 or 8 feet above ground.

Antennas of the sort suggested work best with a ground connection, so take along a ground clip and several feet of wire. Clip the ground wire to the nearest water pipe or radiator. If no water pipe is available and you are camped near a lake or river, or the shore, wrap the end of the wire around a large stone and toss it into the water.”

Logs

The “station” contained five Minilogs spanning April 1955 through Nonmember 1970. They recorded hundreds of contacts.

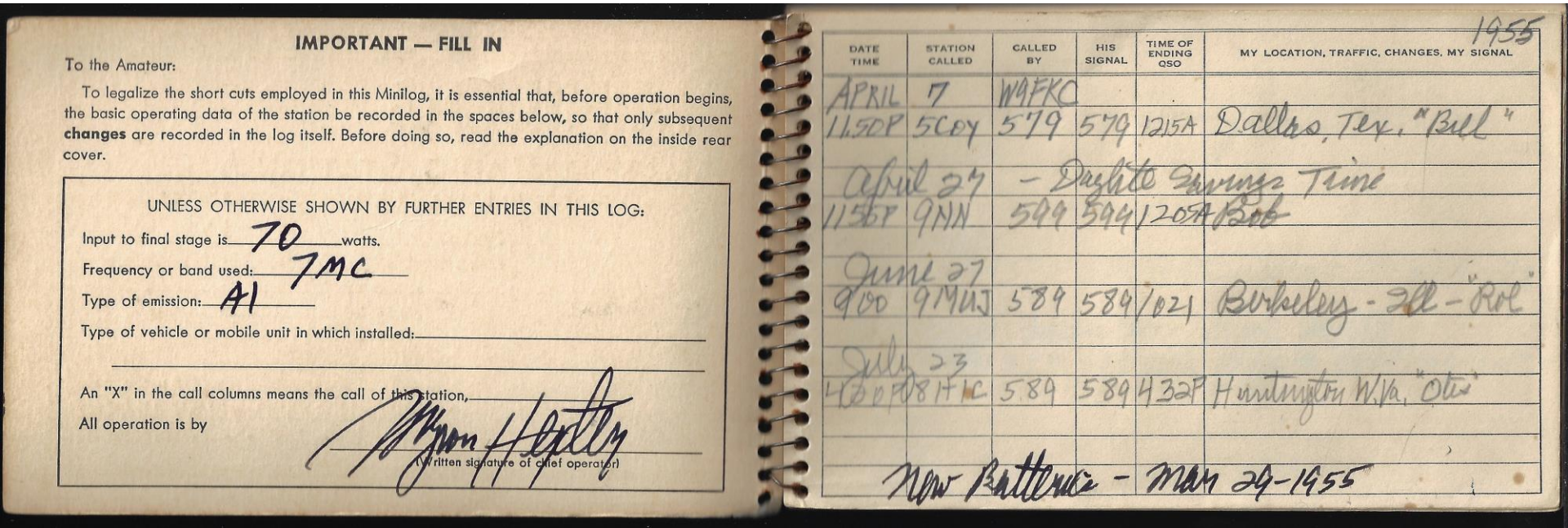

IMPORTANT — FILL IN

To the Amateur:

To legalize the short cuts employed in this Minilog, it is essential that, before operation begins, the basic operating data of the station be recorded in the spaces below, so that only subsequent **changes** are recorded in the log itself. Before doing so, read the explanation on the inside rear cover.

UNLESS OTHERWISE SHOWN BY FURTHER ENTRIES IN THIS LOG:

Input to final stage is 70 watts.

Frequency or band used: 7MC

Type of emission: A1

Type of vehicle or mobile unit in which installed:

An "X" in the call columns means the call of this station,

All operation is by Myron Hexter
(Written signature of chief operator)

1955

DATE TIME	STATION CALLED	CALLED BY	HIS SIGNAL	TIME OF ENDING QSO	MY LOCATION, TRAFFIC, CHANGES, MY SIGNAL
APRIL 7		W9FKC			
11.50P	5COY	579	579	1215A	Dallas, Tex. "Bill"
April 27		– Daylight Savings Time			
11.50P	9NN	599	599	1205A	Bob
June 27					
9:00	9MUJ	589	589	1021	Berkeley - Ill - "Rol"
July 23					
6.00P	8IHC	589	589	432P	Huntington W.Va. "Otis"
New Batteries - May 29-1955					

Other Clues

This Certifies that Myron Hexter, W9FKC

is a member of the

AMERICAN RADIO RELAY LEAGUE

EMERGENCY CORPS

FOR PUBLIC SERVICE

QRR

SUPPORTING DIVISION

In the event of failure of regular communication facilities due to storms, floods, and similar disasters, this operator offers the use of his amateur radio station and services to his country and community, as long as power facilities for radio operation exist.

F. E. Handy Comms. Mgr. A.R.R.L.

NOTICE

Suitcase Portable

Known Examples

- Suitcase Portable #1
  - Signed “W9FKC 5-28-50” (inside left end of case)
  - Estate of Joe Cro – N3IBX - 2020
  - Currently with N3FRQ
- Suitcase Portable #2
  - Probably built by Murray Howe - W90LU (Per W9FKC paper)
  - W9ABA - Carleton P. Ross, 1606 Lake Avenue, Wilmette, Ill.
    - 2+ Miles from W9OLU
    - Couple of blocks from W9TO
  - W9SG - G. (George) Lane Eldred - ”Bought Suitcase Radio Feb. 9, 1953 from 9ABA for $100. Works well.” (W9SG log)
  - Currently with KN4R

The Design

Most of these guys had been hams since they were kids in the 1920's, so designing and building gear was second nature to them. Hexter seems to have been a "road man," and wanted a small effective rig to travel with him.

- Conceived by Myron "Mike" Hexter – W9FKC
- Designed with the help of Mike's friends at the North Suburban Amateur Radio Club (Chicago area – W9AP – License cancelled 06/13/2019.)
- W9TO - James B„ Ricks, 1236 ForestAve., Wilmette, Ill.
  - TX Design
  - Electronic Keyer designer
  - Engineer for Motorola
  - Founded Chicken Fat Operators Club – CFO
  - https://groups.google.com/g/chicken-fat-operators-club
- W9PSR - John T, Clark, 331 Darrow Ave., Evanston, Ill.
  - TX Design
- W9DIU - Paul H. Davis Jr,, 1823 Henley St., Glenview, Ill.
  - RX Design
- W90LU - Murray Howe, 1163 Cherry Street. Winnetka, Ill,
  - Constructed the second suitcase set.

The Locale

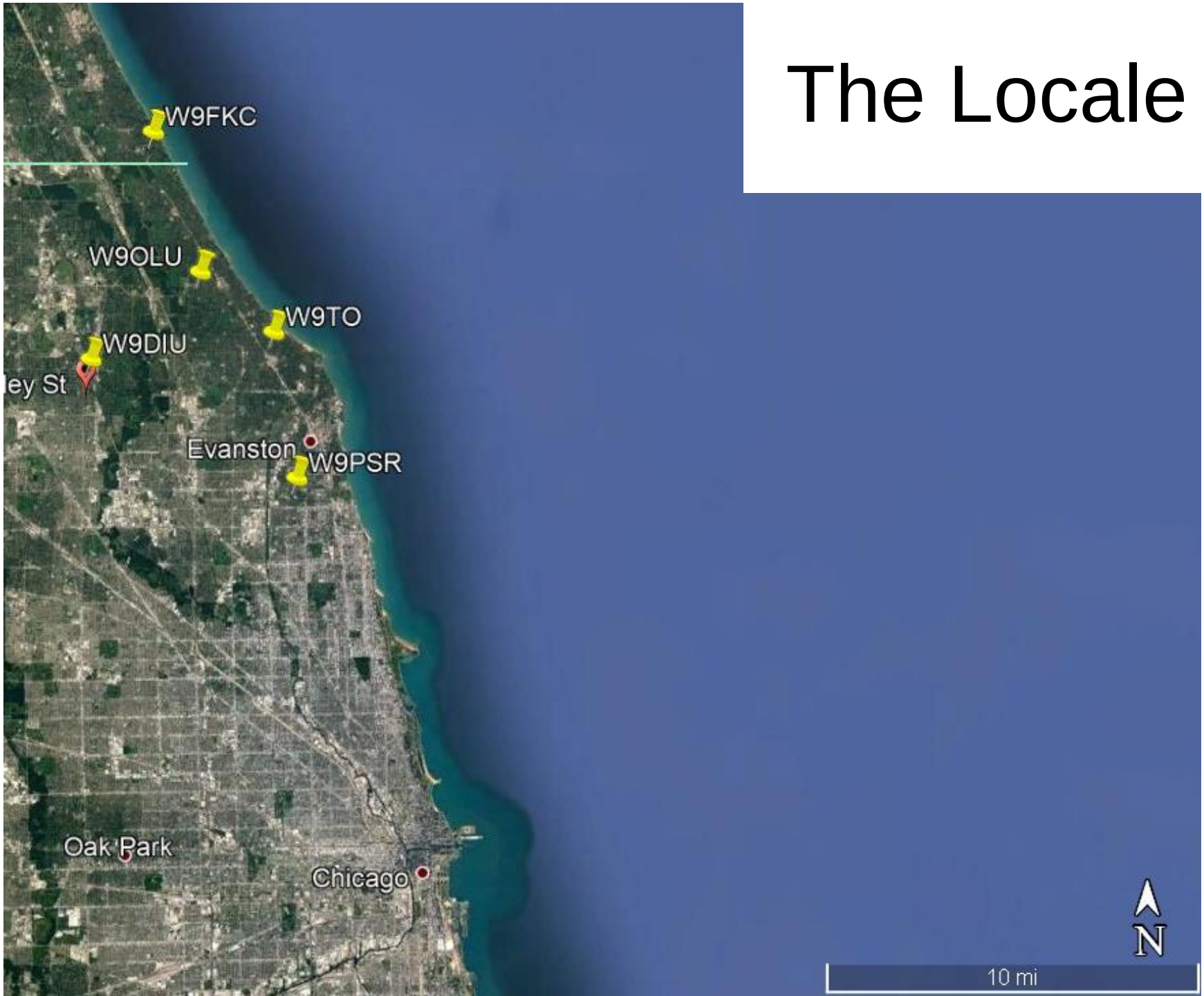
W9FKC
W9OLU
W9TO
W9DIU
ley St
Evanston
W9PSR
Oak Park
Chicago
N
10 mi

The Transmitter

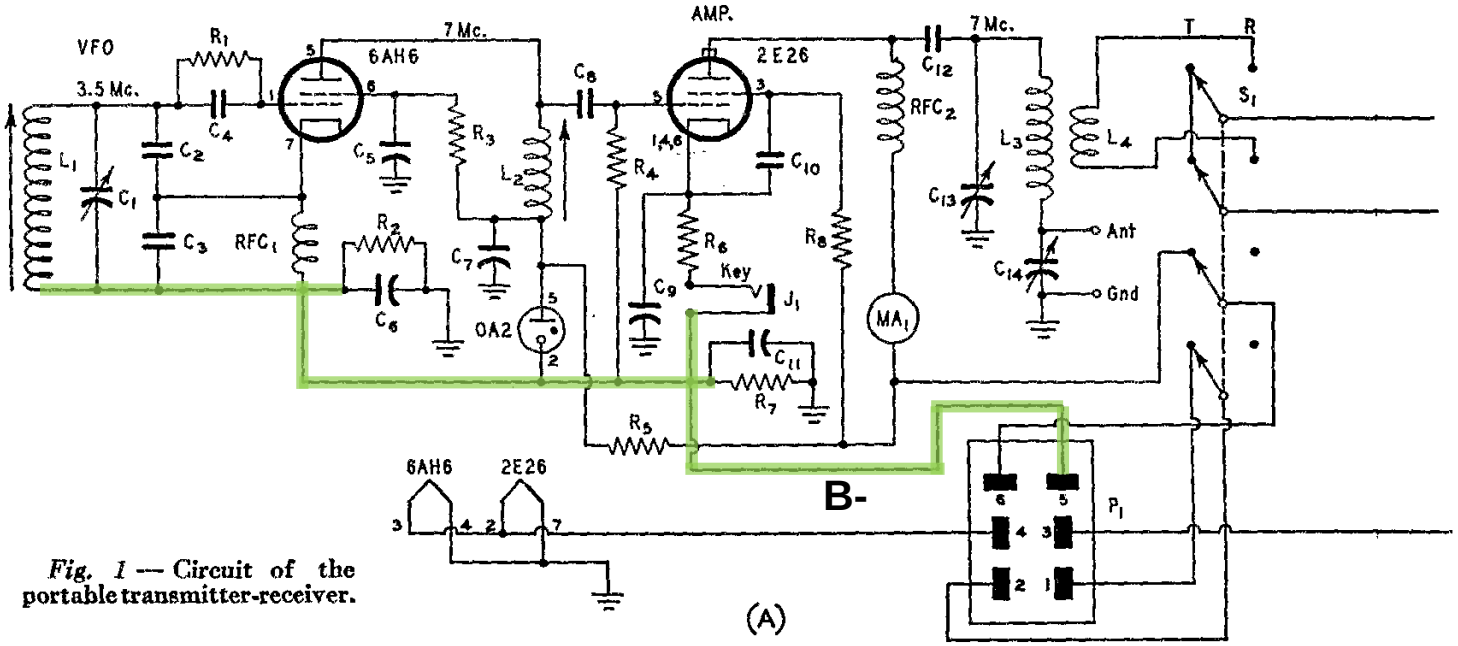

Fig. 1 — Circuit of the portable transmitter-receiver.

The circuit of the transmitter is shown above. " A high-C Colpitts circuit is used in the VFO. A broadband circuit consisting of a slug-tuned coil, *L2,* used in the output circuit of the oscillator, requires only initial adjustment. The 2E26 output tube works into a pi-section tank that permits coupling into almost any random length of Wire as an antenna. The amplifier only is keyed."

The B- bus is isolated from the chassis by R2/C6 and R7/C11. This was necessary because to the absence of a transformer in the power supply.

The Receiver

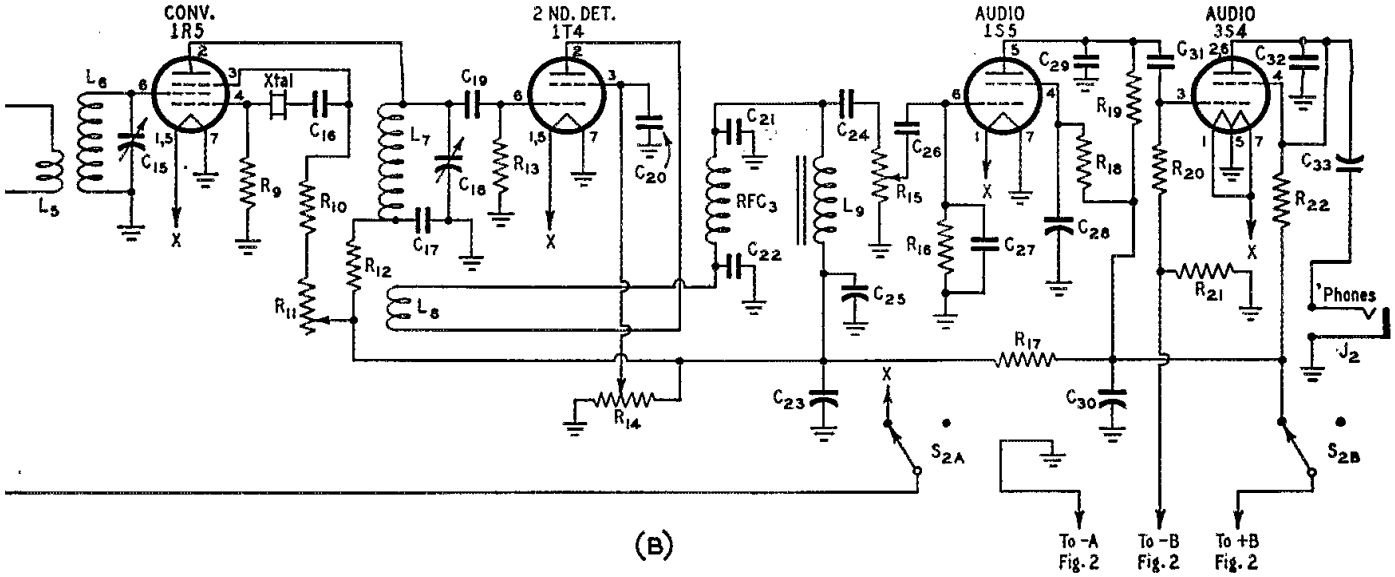

"The receiver circuit is shown in Fig. IB. A 6815-kc. crystal is used in the oscillator section of the IR5 converter which feeds a regenerative IT4 second detector tunable over the range of 185 to 485 kc. This gives a signal range of 7000 to 7300 kc. The two following stages are choke and resistance-coupled audio amplifiers. S1 is the control switch. On the transmitting side, it closes the a.c. line to the power supply (or the battery circuit to the dynamotor-starting relay in the case of mobile operation) and the positive high-voltage line to the transmitter, and shorts the input to the receiver. On the receiving side, it breaks the transmitter power connections and connects the receiver input circuit to a link wound around the transmitter output coil. This provides another tuned circuit for the receiver."

The Power Supply

Fig. 2 — Circuit of the power unit for the portable transmitter-receiver.

C_1, C_2, C_3 — 40-μfd. 450-volt electrolytic (Mallory FP-146).
R_1 — 5 ohms, 2 watts.
B_1 — 1.5-volt A battery (two No. 2 flashlight cells in parallel).
B_2 — 67.5-volt B battery (Burgess XX45).
J_1 — Male connector (Jones P-306-AB).
SR — Selenium rectifier (Federal 404-D-2795).
T_1 — 6.3-volt ½-amp. filament transformer (Stancor P-6134).

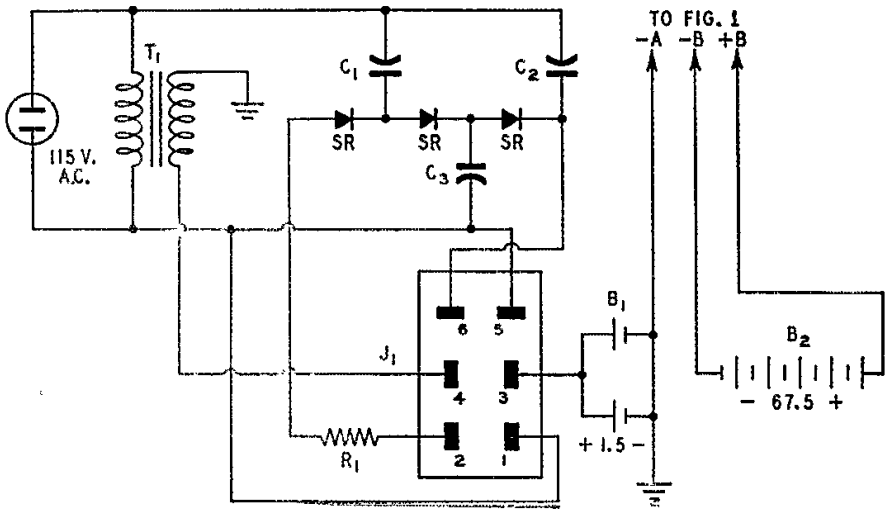

Fig. 2 shows the power-supply diagram. Selenium rectifiers in a voltage-tripling circuit provide 385 volts for the transmitter under full load (72 ma. to the final). The circuit is arranged throughout so that the power plug for the a.c. supply can be inserted either way without placing the chassis and panel at a dangerous potential to ground. A 6.3-volt transformer for the transmitter and dry batteries for the receiver are included in this unit.

The voltage multiplier circuit eliminated the considerable weight of a power transformer. Mike later upgraded the power supply to a voltage quadrupler using silicon diodes providing about 500 volts to the plate of a 6146 tube for greater output.

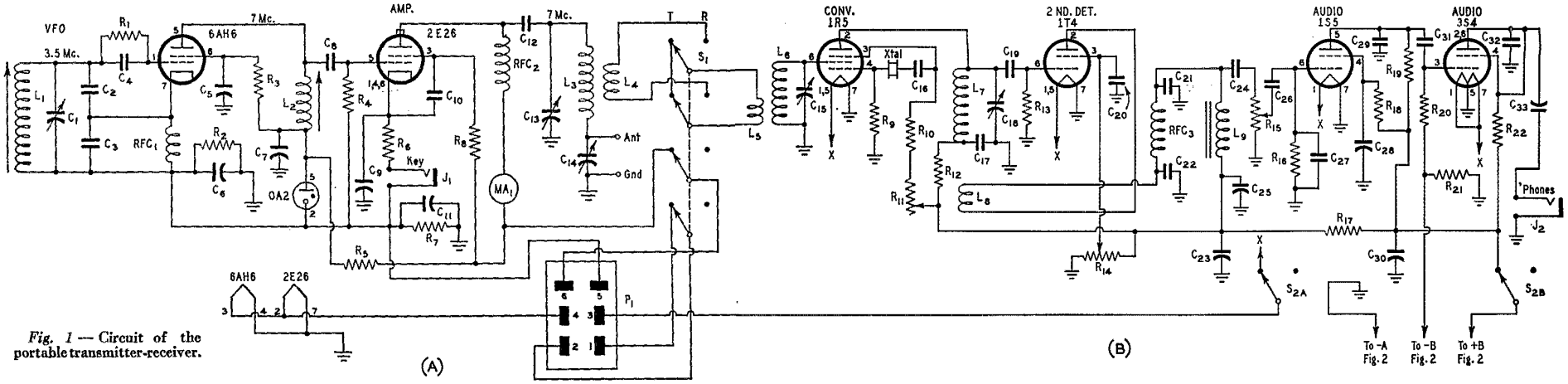

Fig. 1 — Circuit of the portable transmitter-receiver.

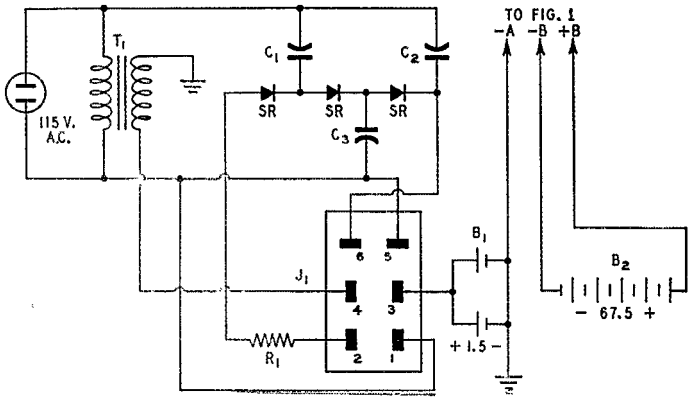

W9FCK's Paper

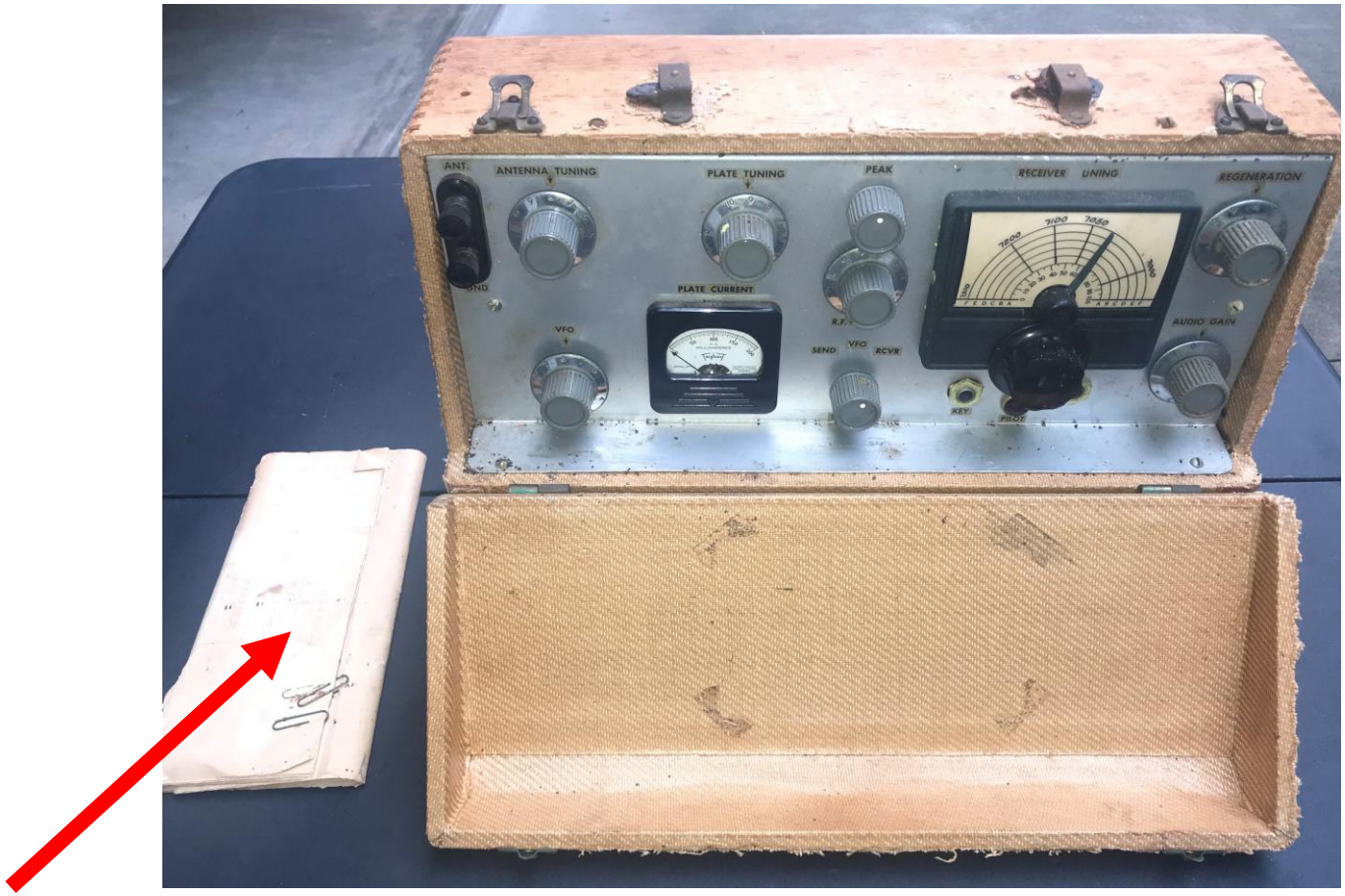

Working with Mike, W9OLU constructed a nearly identical set. This is in the collection of KN4R, and included this paper. This document includes additional information on the development of the design, and schematics showing some later modifications beyond the QST article.